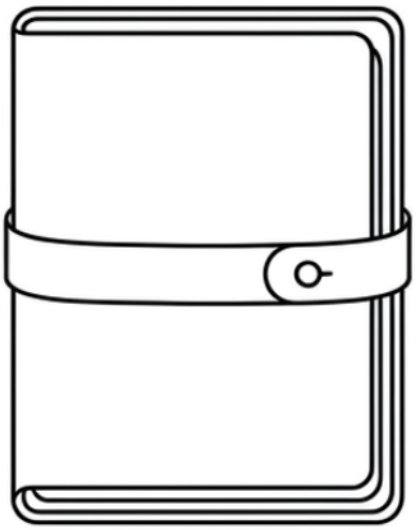



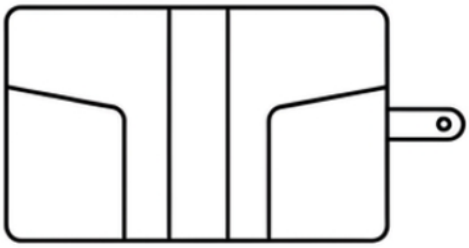

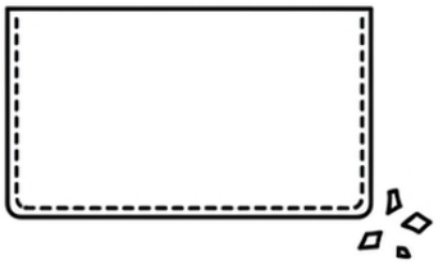

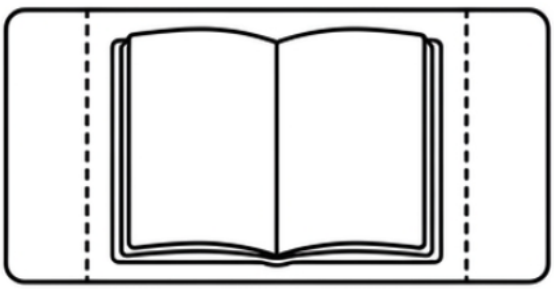

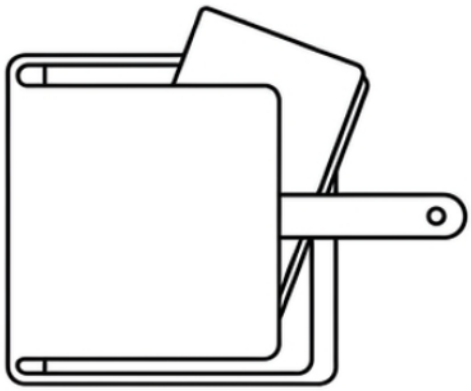

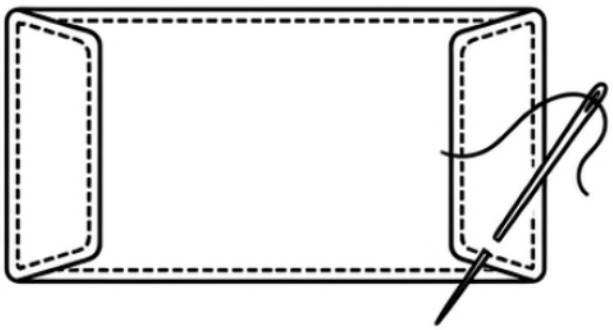

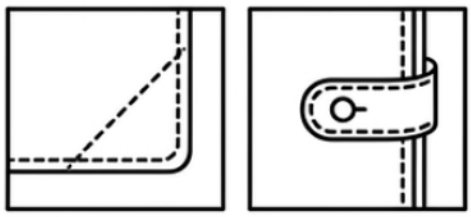

Summer Days